C M Y K Pantone 356 C

A4 - 210mm (W) x 297mm (H) - Outside

AO Smith®
Innovation has a name.

Registered Office
Manufactured by **A. O. Smith India Water Products Private Limited**
(formerly known as A. O. Smith India Water Heating Private Limited)
Plot No. 300, Phase-2, KIADB Industrial Area, Harohalli, Kanakapura Taluk, Ramanagara District - 562 112, Karnataka, India.
Customer Care No. 1800-103-2468/1860-500-2468 ■ Website: www.aosmithindia.com
CIN: U31909KA2006PTC040282



CAHP - 3HP

Air to Water Heat Pump

Storage Capacity - 450 litres

THE HIGH EFFICIENCY REVOLUTION IS HERE!

C M Y K Pantone 356 C

CAHP - 3HP

The CAHP heat pump water heater is an integrated system that utilises the heat pump technology to provide efficient way to heat water with electricity. CAHP pulls heat from surrounding air and deposits the heat into the tank. The end result is hot water with cooler and dehumidified air as a welcome by-product.

FEATURES:

ENERGY SAVING & ENVIRONMENT FRIENDLY



- Absorbs Environment heat and transfers it to the water, at the same time cooling and dehumidifying the ambient air.
- "Environmental-friendly" R-134a refrigerant.
- Dual operating modes maximise efficiency & meet increasing hot water needs.
- High capacity storage tank enables heat pump to operate more frequently than the heating elements. This provides higher efficiency & cover operating costs, saving money for the home owner.

ALL ROUND SAFETY



- Triple protection - Humidity sensor, built-in Anti-dry & Anti-frost function.
- Water can be heated upto 65°C with heat pump mode, which prevents breeding of Legionella bacteria.

SMART & CONVENIENT



LCD remote

- Large LCD touch pad display which communicates current status and displays error messages in plain English when applicable.
- Intuitive icons clearly indicate the current operating mode

HIGH EFFICIENCY CONDENSER



Dual Condenser

Internal & external two stage coil condenser. The external coil preheats the cold water at the bottom of the tank, there by improving the energy efficiency of the unit.

COMMERCIAL-GRADE GLASS TANK LINING



A. O. Smith's Blue Diamond® glass coating is a patented commercial-grade formula that provides superior tank protection and corrosion resistance compared to the industry standard glass lining. Blue Diamond glass coating blend is formulated in the same lab that creates the protection for our industry- leading commercial product line. Through our long history, we've learned that one size rarely fits all. That's why we customize our signature formula to best meet the needs of every water heater we produce, ensuring long life no matter which A. O. Smith model you choose.

CAHP - 3HP

TECHNICAL SPECIFICATIONS-CAHP-120C

Model			CAHP120C-6	CAHP120C-12
Model Type		/	Outdoor integrated heat pump water heater	
HP Rated Power		W	2250	
HP Rated heating capacity		W	8500	
COP		W/W	3.8	
Electrical Heating Capacity		W	6000	12000
Maximum Operation Current	400V / 3N / 50Hz	A	15.8	31.5
	230V / 1N / 50Hz	A	47.1	78.5
Refrigerant		/	R134a	
Refrigerant charge quantity		g	2100	
Tank capacity		L	455	
Net Weight		Kg	264	
Operation Weight		Kg	719	
Water Temp in efficiency mode		°C	65	
Operation Temperature Range		°C	35~82	
Ambient Temperature for HP		°C	0~48	
Ambient Temperature for Unit		°C	-5~50	
Unit Operation Noise		dB (A)	59	
Air Outlet Noise		dB (A)	62	
Demison (LxWxH) mm		mm	1002x770x1717	
Anode		/	Aluminum Rod	
Control Mode		/	Led wire Display (Standard 10m, Optional Maxium 30 m)	
Operation Mode		/	Efficiency, High Demand	
Other Control Functions		/	Timer, Fault Alarming, Anti freezing, Water pump controlling	
Power Supply Specifications		/	230V/1N/50Hz and 400V/3N/50Hz	
Connection Size ~ Inlet / Outlet		/	1Inch (Female Thread)	

Heat pump performance is the mean performance under condition* 20(dry bulb)/15(wet bulb) Cambient temperature and 15°C to 55°C water temperature*

External dimensions

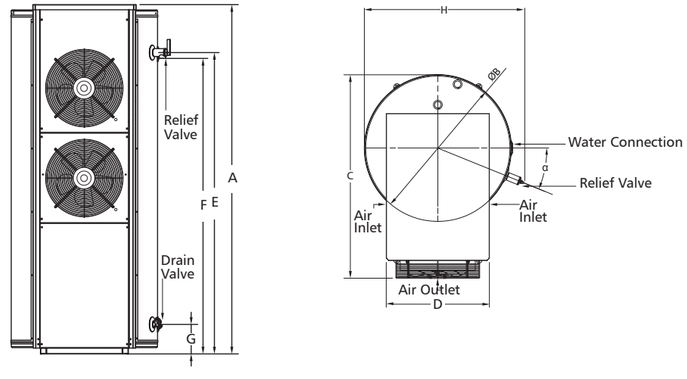

EXTERNAL DIMENSIONS

Model	Total height A (mm)	Tank diameter B (mm)	Maximum depth C (mm)	Service panel width D (mm)	Relief valve height E (mm)	Water outlet height F (mm)	Water inlet height G (mm)	Relief valve angle α (°)	Maximum width H (mm)
CAHP-120C	1770	711	1002	600	1476	1468	153	22	770